A Universal Programming Cable for Radios

http://www.cqham.ru/uniprog2_eng.html

The programming cable is intended to be used with a computer RS-232 port for programming radios and other devices. The main goal of this cable schematics is inverting signal levels. That is because COM port's logic one is a low voltage level, logic zero is a high voltage level. Another goal is the correct voltage level transformation with regard for the real radio programming cirquits. And nothing must get burnt...

Schematic diagram

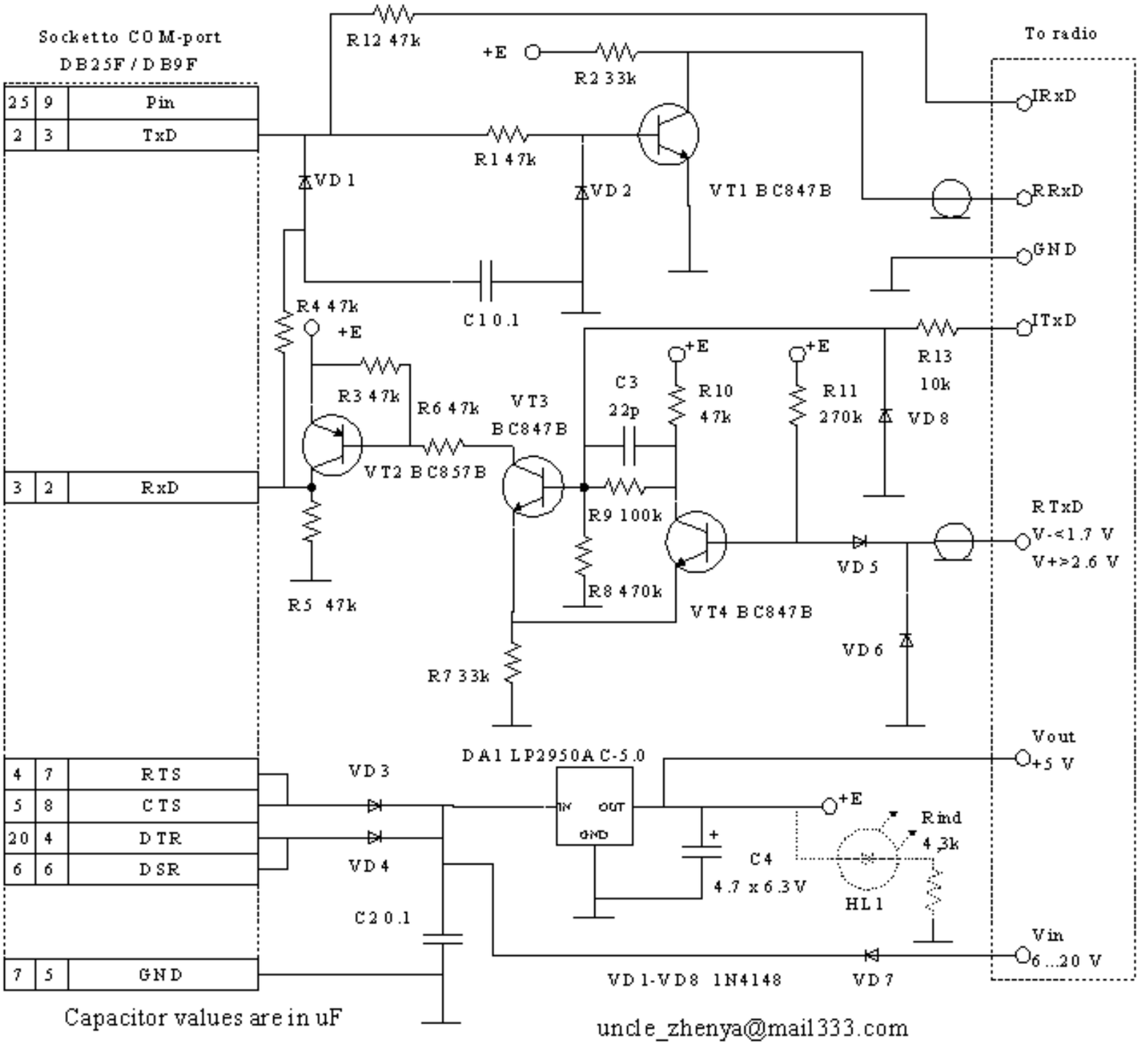

Connection circuits (jacks for mobile radios are shown as they are plugged into sockets)

KENWOOD mobile

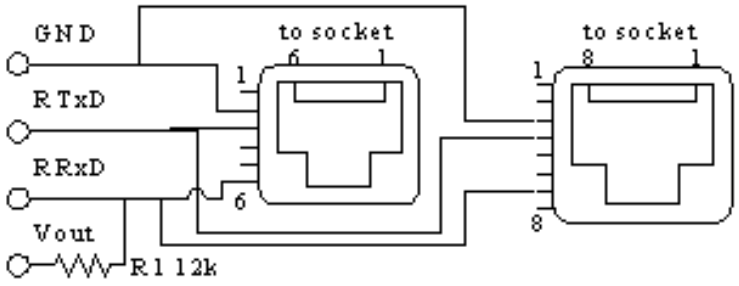

KENWOOD portable

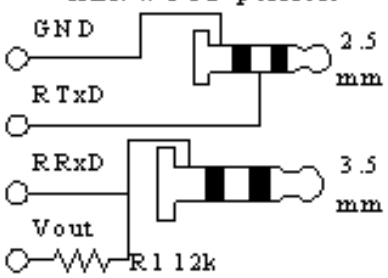

YAESU / VERTEX portable

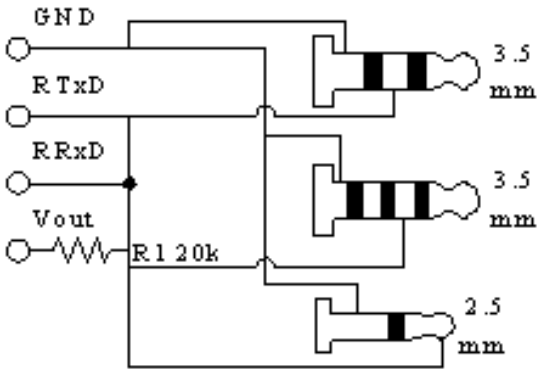

VERTEX mobile / repeater

MOTOROLA mobile

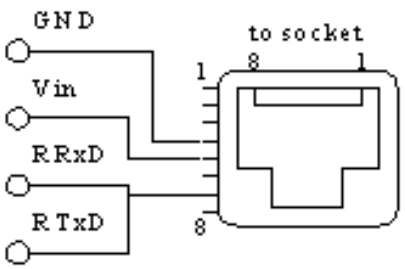

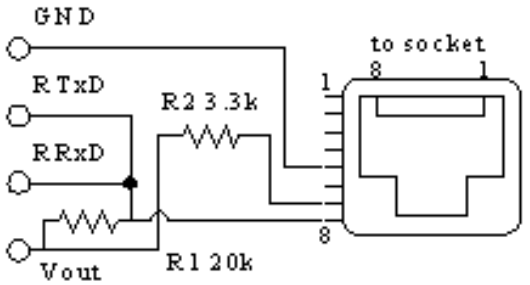

ALINCO portable/mobile,
ICOM portable

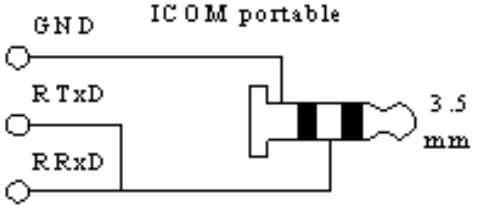

ICOM mobile

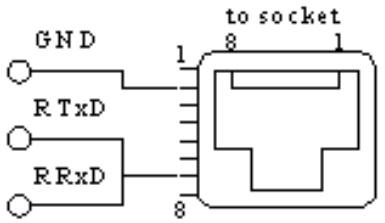

ICOM IC-F110/F111/F210/F211

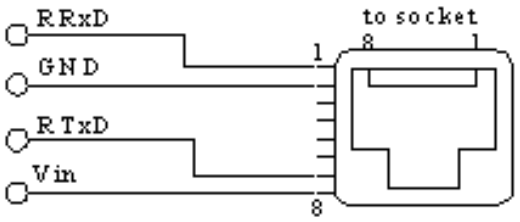

ICOM IC-F30LT/F40LT

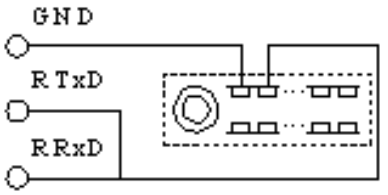

KENWOOD TK-690/790/890

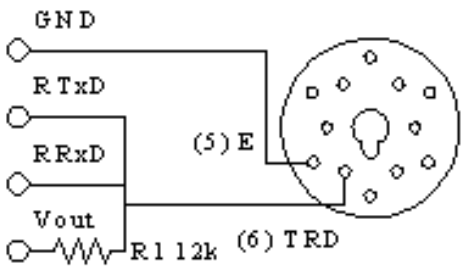

YAESU FT-857 CAT interface

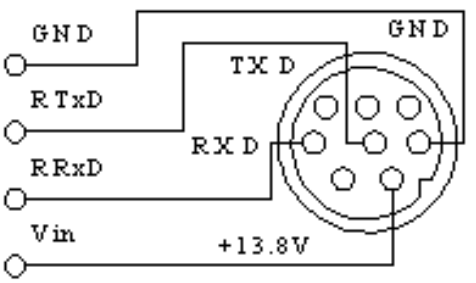

MOTOROLA GP-300

MOTOROLA P040, P080,

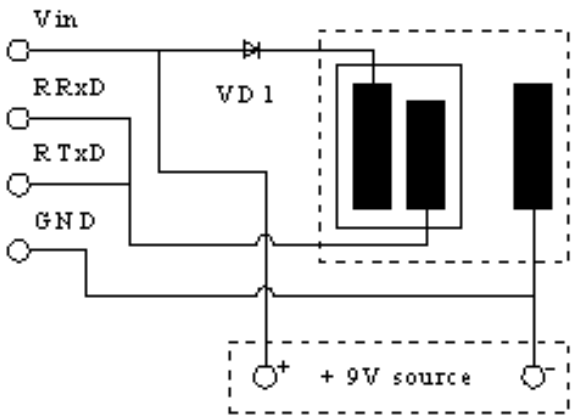

CP series

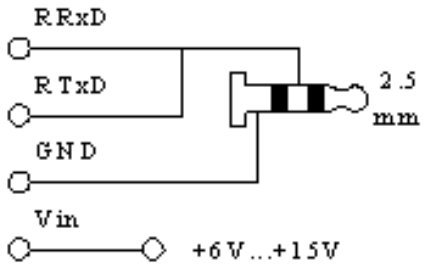

MOTOROLA CM series

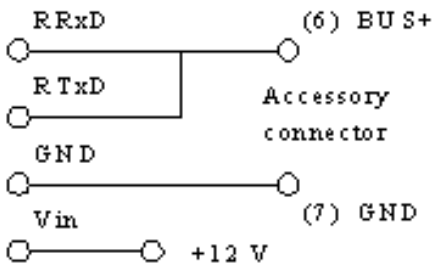

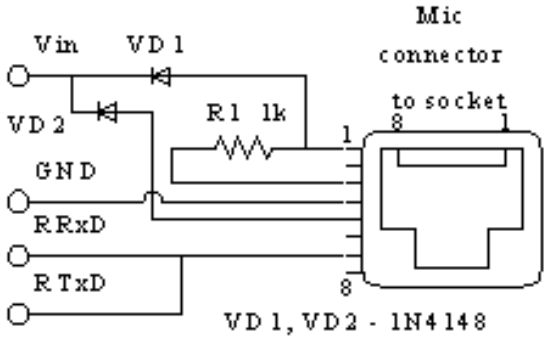

VD 1, VD2 - 1N4148

MOTOROLA GP-340

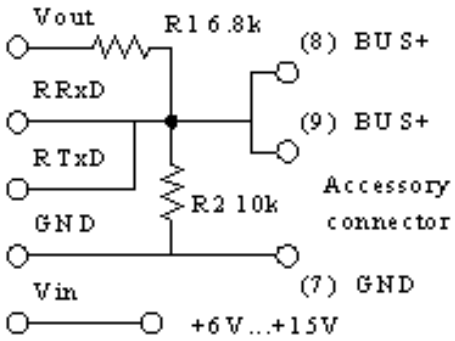

TAIT T2000 series

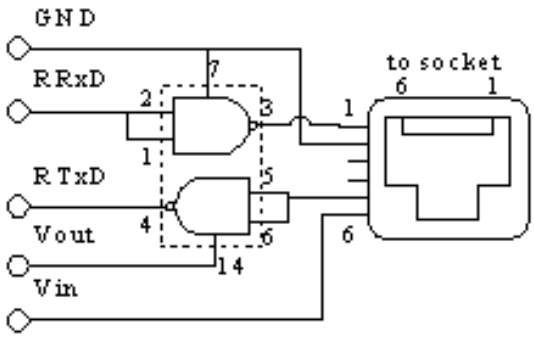

DD 1 CD4093 (CD4011)

MAXON SL500

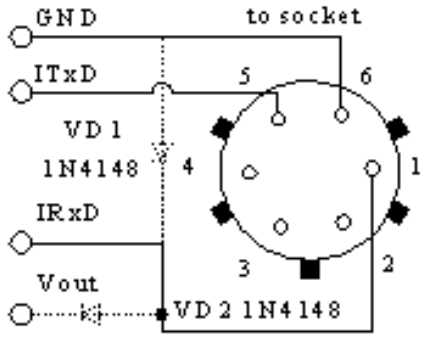

HYT TC-500

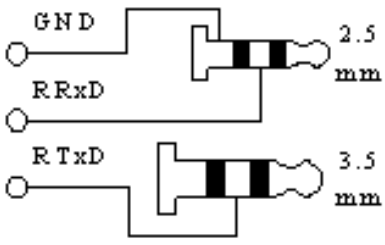

ALTAVIA portable

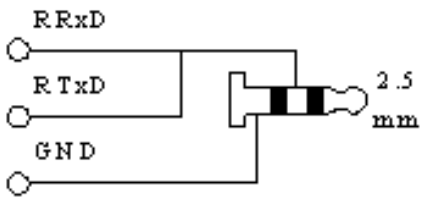

STANDARD GX-2000

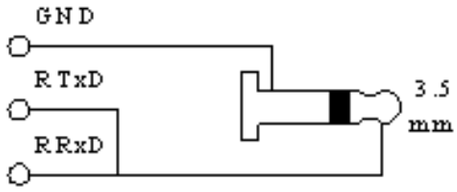

GRANIT-202

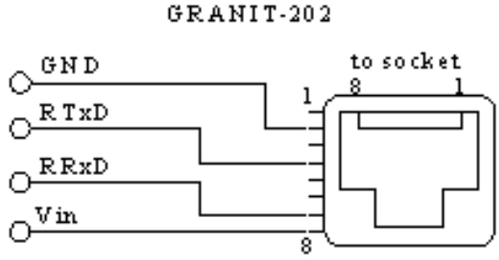

DRAGON SY-5430

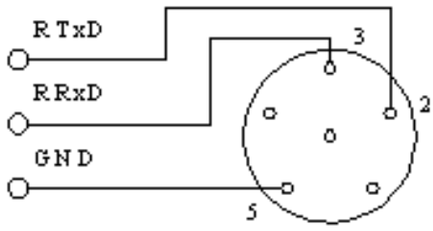

TAIT T2000 Series and T3000 Series Handy

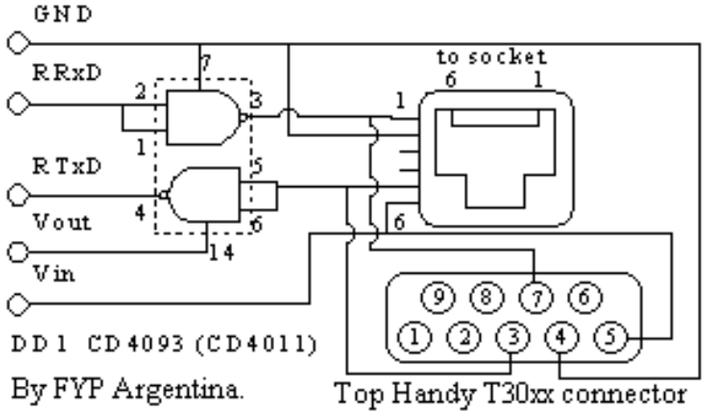

VERTEX VX-800,
VX-4000, VX-6000

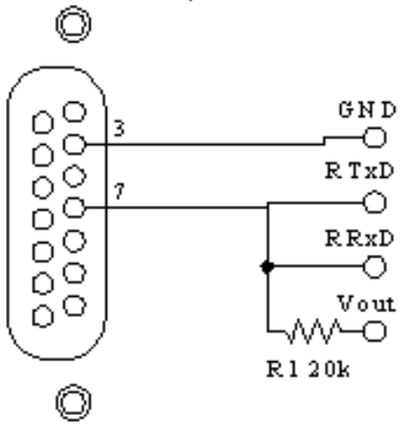

ICOM IC-F31G/F41G

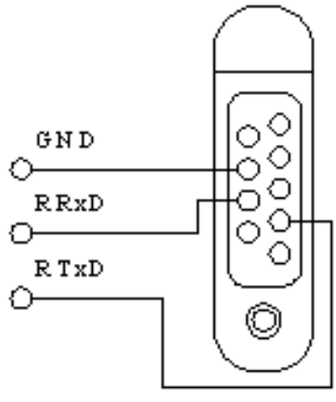

Cordless telephones

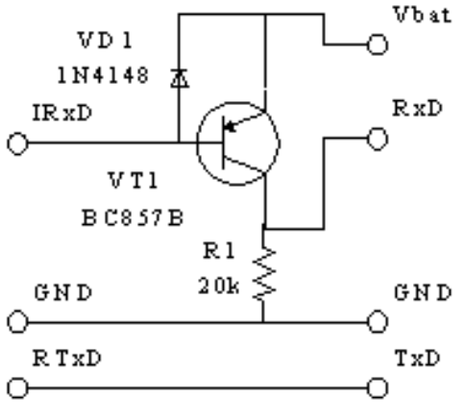

Cellular telephones

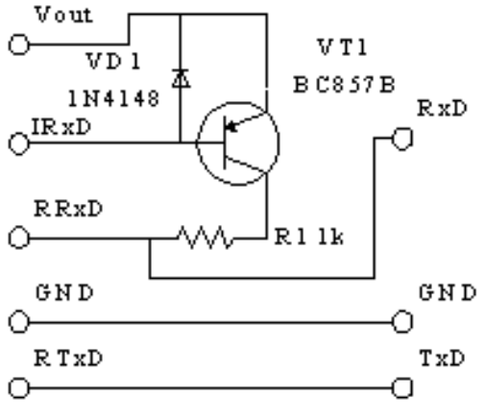

SIEMENS cellular phones
A/C/S/M/SL 2x, 3x, 4x, 5x

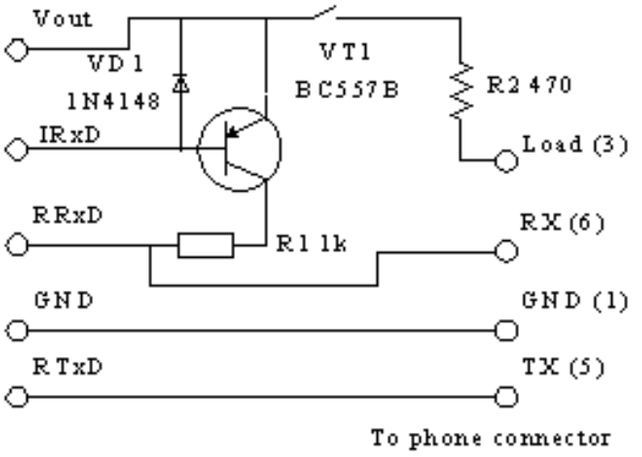

GP-340 connector (draft by K. Bokhanov)

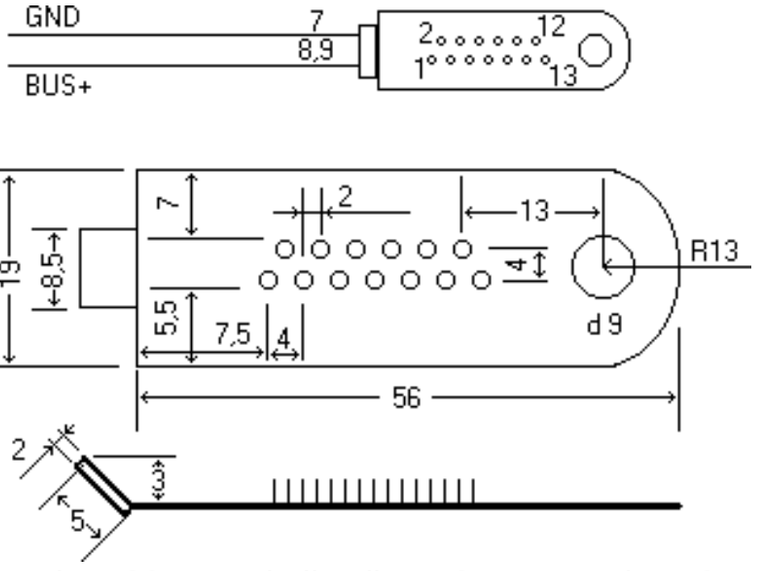

VT1, VT3, VT4 transistors may be BC847 or similar (i.e. BC547B, etc.), VT2 may be BC857 or similar (i. e. BC557B, etc.). Fast silicon diodes of any type will do, for example 1N4148 or LL4148 in MiniMELF case. LP2950 is replaceable with LM2951 with appropriate resistors, 78L05 is the worst choice due to it's own high current consumption. It may fail to work in some cases. Use 78L05 with an external power source.

Cable for RRxD and RTxD connections should be shielded. Multiwire cable with low mutual capacitance among wires is also applicable. Otherwise TxD to RxD interference will result in programming failure. It is important for some KENWOOD radios.

It is convenient to use an additional connector to attach particular radio jacks to the programming cable. DB9 is recommended as a highly reliable one.

Cable connection to KENWOOD portable radios has a specific feature. Radio sockets have prominent rubber rings, thus standard stereo jacks cannot be plugged in firmly. The jack flanges should be ground off till 5 mm in diameter. The jack cases should be cut accordingly.

TK-353 radios are put in the program mode by holding the side button below PTT and C button while powering the radio on. Hold the buttons until "--PC--" appears on its display. TK-250 enters programming mode by pressing *Lamp* and *Lo* buttons while turning the radio on.

In MOTOROLA GP300 connector use 2 Ampere diode if you intend to transmit with the cable connected or 1 Ampere diode otherwise. In MOTOROLA P040-P080 connector grind off the jack flange until the jack can be seated firmly. This connector does not need an external power supply if it is provided from the port by a programming software.

MOTOROLA mobile CM series radios are programmed through the rear accessory connector. The programming cable is not powered from the port. The power supply can be taken from the radio power supply or the accessory connector if available. The corresponding programming cable connector was designed by **Vadim UA9MIR**

MOTOROLA mobile CM series radios may be also programmed through the front mic socket. The programming cable is powered from the radio socket. The corresponding programming cable connector was designed and tested by **Belu Daniel** (Romania).

In MOTOROLA GP-340 connector the output voltage is limited to approximately 3 Volts. The specific jack is used, it is shown on Fig. 4.

VERTEX VXR-5000 and VXR-7000 programming software works improperly on modern computers with fast processors. Computers with i80486 are recommended by VERTEX, iCeleron 433 MHz processor may be also applicable.

An unusual connector is needed for KENWOOD TK-690/790/890 radios. Common data transmission and reception line is used.

The cable can be used as a CAT interface for tranceiver control. This cable connector includes separate Tx and Rx data lines and a power supply from the radio.

Alexander Nesterov has designed the TAIT T2000 series radio connector. The main idea is the additional level invertion using a CMOS logic IC. CD4093 is recommended because it has Scmitt trigger inputs. However, any CMOS invertor can be used. Unused IC inputs (not outputs !) should be grounded.

Alexander Nesterov has also designed the programmer schematics enhancements (VD8 and R13) and a specific connector to program MAXON SL500 radios. The programmer is used as a non-inverting buffer. In SL500 connector VD1 and VD2 diodes provide an extra protection of radio. They can be omitted if desired.

Oleg EX8MLT has proposed HYT TC-500 radios connector. It is different from KENWOOD portables connector which is used for other HYT radios. Both jacks should be plugged in simultaneously.

Alexander Ivanov has designed a connector to ALTAVIA radios. These radios are designed and manufactured in Russia. The connector is similar to MOTOROLA P040/P080 portables connector but needs no external power supply.

Alexander UA9CEE has designed a connector to STANDARD GX-2000 radios. The radio should be programmed with slow computers (recommended processor rate 166 MHz or less) under MS DOS.

Valery UA6LPG has designed a connector to Russian Granit-202 radios. Programmer schematics is classic. The radio is put into programming mode by holding 'Phi' button while powering on.

Yuri US5IVZ has designed a connector to DRAGON SY-5430 programmable radios. It should be linked to the microphone connector.

Federico Menthe (Argentina) has modified the TAIT radios connector. Now it is capable to program T3000 series handheld radios (see Fig. 3).

Vladimir Vashchenko has designed a connector schematics for VERTEX VX-800, VX-4000, VX-6000, etc. These radios have a specific accessory connector.

Vladislav Bashaev has designed a connector schematics for ICOM IC-31G/41G.

A connection to devices with a non-standard processor supply voltage (**cordless and cellular phones**) requiers a special connector. A TxD key power is taken from the phone, so the input logic levels cannot exceed the processor supply voltage. For example SENAO SN-258 is attached by its test connector in this way: TxD - cont. 1, RxD - cont. 2, GND - cont. 3, Vbat - cont. 5. R1 resistor may be omitted because the phone RxD cirquit has an inner 47 kOhm resistor to the ground.

The cellular phones connector can be used for applying AT-commands or firmware replacement. There are no hardware flow control cirquits in the connector. The Siemens specific connector is shown. Use it for AT-commands with the switch turned off, for firmware downloading with the switch turned on. The Siemens phone socket pinout is from www.pinouts.ru. For more information please search specific cell phone sites.

The programming cable **printed cirquit board** (97.2 kB) was designed by **Valery UA6LPG** with non-chip components. In order to print it save the GIF image to disk. Then open the GIF file with Adobe Photoshop (or any other editor) and change the image resolution to 600 dpi (look for at Image/Image size). Print it, it will be of the right size.

Please note that Rind resistor and a LED are used just to indicate the power supply voltage. You can omit R12, Rind and a LED, the cirquit will work. Some words are in Russian, the most significant words are translated. The recommended value of Rind is 4.3 kOhm to minimize the current consumption, the LED will glow slightly.

The programming cable was tested with **206** device types, i.e.

Device type	Checked by	Recommended software
KENWOOD		
TK-2102	Norman Miller CX1ANM (Uruguay)	KPG-55D
TK-2106Z	Alexander Ivanov	KPG-55D
TK-2107	Vladimir Yasakov, the author, Sergey UA9UDQ, Ivan UX7MX, Igor Marzaganov, Alexander UA4LOR, Sergey EW6GC, Vladimir Vashchenko, RV4HV, ALEKSEY30, MALE aka Dmitry, Alexander Nesterov, Dmitry EW3BX, Igor UU8JA, Denis Alafinov, Igor UR5YEI, Nikolay UT5VF, Vladislav Bashaev	KPG-55D
TK-2160	Nikolay Novakov, Alexander Nesterov, Lahodni Stefan (Romania), Belu Daniel (Romania)	KPG-82D
TK-2200	Sergey Bunin	KPG-88D
TK-2206	Sergey Bunin, Alexander Nesterov	KPG-87D
TK-2207	Sergey Bunin, Denis Alafinov, Jaco Le Roux (South Africa), Paolo IW3SQM	KPG-87D
TK-2260	Alexander Nesterov (same as TK-2206)	KPG-87D
TK-250	Valery UA6LPG, Belu Daniel (Romania)	KPG-23D
TK-260G	Valery UA6LPG, Vladimir Fyodorov	KPG-56D
TK-270	Alexander UA4LOR, Belu Daniel (Romania), Nikolay aka 'KOKA'	KPG-27D
TK-270G	Sergey RU3VV, Gorodnov, Nikolay Novakov, Albina Luchaninova, Vladimir Fyodorov	KPG-56D
TK-278	Yevgueny RA9MHL, Igor Marzaganov, Alexander Nesterov, Lahodni Stefan (Romania), Denis Alafinov, Nikolay UT5VF, Yuri RA9SVD, Nikolay aka 'KOKA'	KPG-27D
TK-3101	Alexander 'Gulliver'	
TK-3107	Loay Jawad (Iraq)	KPG-55D
TK-3160	Sergey Bunin	KPG-82D
TK-3168	Sergey Bunin	KPG-82D
TK-3170	the author	KPG-101D
TK-3200	Sergey Bunin	KPG-88D
TK-3202	Nikolay aka 'KOKA', Norman Miller CX1ANM (Uruguay)	KPG-87D

TK-3206	Sergey Bunin, the author, Nikolay aka 'KOKA'	KPG-87D
TK-3207	Sergey Bunin	KPG-87D
TK-350	Alexander UA9CEE, Sergey UA0CIC	KPG-23D
TK-353	the author	KPG-26D
TK-360	the author	KPG-27D
TK-360G	the author, Romunas Majauskas	KPG-56D
TK-370	Alexander 'Gulliver', Igor UU8JA, Norman Miller CX1ANM (Uruguay)	KPG-27D
TK-370G	Sergey UA9UDQ	KPG-56D
TK-378	the author, Denis Alafinov, Yuri RA9SVD	KPG-27D
TK-480	Alexander UA9CEE	KPG-35D
TK-7020 (the same as TK-7108)	Yuri US5IVZ, Alexander Nesterov, Nikolay UT5VF	KPG-70D
TK-7060 (same as TK-760G)	Alexander Nesterov	KPG-56D
TK-7060 (same as TK-7160)	lexander Nesterov	KPG-99D
TK-7108	Sergey Bunin, Victor UN1EAE	KPG-70D
TK-7160	Sergey Bunin, Belu Daniel (Romania)	KPG-99D
TK-752E	Belu Daniel (Romania)	KPG-28D
TK-759	Alexander 'Gulliver'	KPG-28D
TK-760	Alexander UA9CEE, Andrey Kolennikov, Victor UN1EAE, Belu Daniel (Romania)	KPG-29D
TK-760G	Andrey Kolennikov, Vladimir UA9FIA	KPG-56D
TK-760G 5-tone	Belu Daniel (Romania)	KPG-67D
TK-760H	Alexander Nesterov	KPG-29D
TK-760HG-1	Sergey UA9UDQ, Vladimir Vashchenko, ALEKSEY30, Alexey Gordeyko, Alexander UA9CEW, Victor UN1EAE	KPG-56D
TK-762G 5-tone	Belu Daniel (Romania)	KPG-67D
TK-768G	Albina Luchaninova	KPG-56D
TK-8102	the author	KPG-70D
TK-8160	the author, Sergey Bunin	KPG-99D
TK-8180	Sergey Bunin	KPG-89D
TK-840	the author, Alexey RZ3AIQ	KPG-25D
TKR-850	the author	KPG-91D
TK-860	MALE aka Dmitry	KPG-29D
TK-860G-1	the author, MALE aka Dmitry	KPG-56D
TK-860H	the author	KPG-29D
TK-880	Sergey Bunin	KPG-49D
TK-880-3 (MT)	the author	KPG-60D
KIRISUN (KENWOOD portables connector)		

PT-2208S	Vladimir Vashchenko, Nikolay aka 'KOKA'	KSP-11
PT-3208S	Vladimir Vashchenko, ALEKSEY30, Nikolay aka 'KOKA'	KSP-11
PT-3209	Vladimir Vashchenko, ALEKSEY30	
PT-3288S	Vladimir Vashchenko	
HYT		
TA-240	Vyacheslav UR5ROZ, Alexander Nesterov (KENWOOD portables connector)	
TC-268 (Eclipse)	Jaco Le Roux (South Africa)	
TC-268S (Eclipse)	Jaco Le Roux (South Africa)	
TC-368 (Eclipse)	Jaco Le Roux (South Africa)	
TC-368S (Eclipse)	Jaco Le Roux (South Africa)	
TC-500	Oleg EX8MLT	HT500S
TITAN		
RN-102	MALE aka Dmitry, Alexander Nesterov (radio identical to TK-2107, *KENWOOD portable* connector)	KPG-55D
TWR		
DJ-344KU	Roman RN3ADR (*KENWOOD portable* connector)	Linton
LINTON		
LT-2188	Nikolay aka 'KOKA' (*KENWOOD portable* connector)	MCP-318
YAESU / VERTEX		
VX-1R	Yevgueny RA9MHL	VX1
VX-2R	Alexey RZ3AIQ, the author	VX2, VX2 commander
VX-5R	Igor RA0FMF, the author	VX5
VX-7R	Sergey Bunin, Gyula HA7JCA (Hungary)	VX7
FT-10R	Alexander 'Gulliver'	WFT10
VX-10	Igor Marzaganov, the author, MALE aka Dmitry, Nikolay Strokinov, Dmitry EW3BX	CE14
FT-11R	Igor Marzaganov	WFT11
FT-40R	Alexander 'Gulliver'	WFT40
FT-41R	the author	WFT41
FT-50R	the author	WFT50
FT-51R	Dmitry UA2FBB, MALE aka Dmitry	WFT51
FT-60R	Igor RA0FMF	FT-60 Commander
VX-160	Veniamin Dolgikh, Pavel RA0SJB, RV4HV, Alexander Nesterov, Yuri RA9SVD	CE44

VX-160E	Alexander Nesterov	CE51
VX-180	Veniamin Dolgikh, Paolo IW3SQM	CE44, CE51
VX-200	Yevgueny RA9MHL, Yevgueny RU6AI, Alexander Ivanov	CE9
VX-210A	the author, MALE aka Dmitry, RN3DD, Sergey Bunin	CE45
VX-210	Vladimir Vashchenko, Alexander Ivanov, Sergey Bunin	CE29
VX-300	Igor RA0FMF, Alexander Kiselyov, Alexander Nesterov	CE18
VX-400	Igor Marzaganov, Vladimir Vashchenko	CE24
VX-420	Igor RA0FMF	CE64
VX-500	Yevgueny RA9MHL, Alexander 'Gulliver', Alexander Nesterov	CE6
VX-800	Vladimir Vashchenko	CE49
FT-857D	Sergey UA0CIC (as the CAT interface)	
FTL-1011	Nikolay Novakov, Alexander Kiselyov, Oleg RU6FB	CE5, CE7 (99ch)
VX-2000	Yevgueny RA3ZMB, EU7SS, Vyacheslav UR5ROZ, Vladimir Vashchenko, Pavel RA0SJB, the author, Andrey Kolennikov, Alexander Nesterov	CE20
FTH-2008	Nikolay Strokinov	CE2
FTH-2010	Alexander Nesterov, Alexey UR8QM, Romunas Majauskas, Gyula HA7JCA (Hungary)	CE2
FTL-2011	Veniamin Dolgikh, Alain Seguin (Canada), Yuri RA9SVD, Vlad RV6HG, Oleg RU6FB, Alexander UA9CEW, MALE aka Dmitry, Victor RK6MP (99ch)	CE5, CE7 (99ch)
VX-2500	Paolo IW3SQM	CE63
VX-3000	Sergey UA9UDQ, Vladimir Vashchenko (VHF and LB radios), Valery UA6LPG	CE19
VX-3200	Vlad RV6HG, Vladimir Vashchenko, Alexey Gordeyko	CE52
VX-4000	Vladimir Vashchenko, Maxim Zorkaltsev (software versions 3.3.0.0 and 3.2.3.0 work fine, version 1.0.6.0 is disfunctional)	CE49
VXR-5000	the author (a computer with the iCeleron 433 MHz processor)	CE8
VX-6000	Vladimir Vashchenko	CE49
VXR-7000	Alexander Tataurov (a computer with the i80486 processor), Vladislav Bashaev	CE27
FTH-7008	Romunas Majauskas	CE2
FTL-7011	Alexander UA9CEW (99ch), Vladimir Vashchenko, Alexander Nesterov, the author	CE5, CE7 (99ch)

FTL-7014	the author (software equivalent to FTL-7011)	CE5
FT-8800R	Andrey UA3USQ, Igor RA0FMF	FTB8800
MOTOROLA		
P020	Yevgueny RA9MHL (P040/P080 connector)	
CP040	Andrey UA3USQ, Gyula HA7JCA (Hungary), Jaco Le Roux (South Africa), Alexander Nesterov	R05.04
GP040	Valery UA6LPG	R02.02.00
P040	Veniamin Dolgikh, Stan UN8GA, MALE aka Dmitry, Alexander Nesterov, Andrey Kolennikov, Jaco Le Roux (South Africa), Andrey UA3USQ, Nikolay aka 'KOKA'	R02.02.00
P080	Valery UA6LPG, Pavel UA1ZCC, MALE aka Dmitry, Alexander Nesterov, Jaco Le Roux (South Africa), Nikolay aka 'KOKA'	R02.02.00
GP68	Alexander Nesterov, Igor UU8JA	
GP88	Andrey Kolennikov (GP-300 connector)	GP300 R01.00.00
M10	Alexander Nesterov	GM300 R04.00.00
M100 RADIUS	Belu Daniel (Romania)	Radius Mobile R08.00.00
M110	MALE aka Dmitry, Alexander Nesterov, Jaco Le Roux (South Africa)	GM300 R04.00.00
P110	Igor Marzaganov, MALE aka Dmitry, Alexander Nesterov, Yuri RA9SVD	GP300 R07.00.00
M120	Alexander Nesterov, Jaco Le Roux (South Africa), Belu Daniel (Romania)	GM300 R04.00.00
CM-140	ALEKSEY30, Valery UA6LPG, Veniamin Dolgikh, Yuri RA9SVD, Belu Daniel (Romania), Nikolay aka 'KOKA'	R02.04, R05.00, R05.00.02, R05.04
GM-140	MALE aka Dmitry	
CP-140	Dmitry Shilo	R05.01
CM-160	Vadim UA9MIR, ALEKSEY30, Valery UA6LPG, Belu Daniel (Romania)	R02.04, R05.00, R04.00, R05.04
GM-160	Andrey Aladyin, Valery UA6LPG	R04.00.00, R06.04
CP-180	Valery UA6LPG (MOTOROLA P040/ P080 connector)	R05.00
M208	MALE aka Dmitry, Oleg Tchugunov	RADMBL
M216	MALE aka Dmitry	RADMBL

GM-300	the author, Sergey RU3VV, Yevgueny RA9MHL, Valery UA6LPG, Igor Marzaganov, Oleg RU6FB, RV4HV, MALE aka Dmitry, Alexey Gordeyko, Alexander Nesterov, Andrey Kolennikov, Albina Luchaninova, Igor UU8JA, Nikolay UT5VF, Yuri RA9SVD, Belu Daniel (Romania), Vladimir Fyodorov, Nikolay aka 'KOKA'	GM300 R04.00.00, R05.00.00
GP-300	the author, Yevgueny RA9MHL, Igor RA0FMF, Valery UA6LPG, Igor Marzaganov, Mikhail Gorokhov, RV4HV, Victor RA1TDC, Alexander UA1THR, MALE aka Dmitry, Alexey Gordeyko, Alexander Nesterov, Igor UU8JA, Igor UR5YEI, Jaco Le Roux (South Africa), Yuri RA9SVD, Nikolay aka 'KOKA'	GP300 R07.00.00, GP-300IVG
GP-300 Select 5	MALE aka Dmitry, Alexander Nesterov	R02.04.00
GP-340	Vadim UA9MIR, Sergey EW6GC, Sergey RX6LRE, RV4HV, Vladimir Vashchenko, Alexander Nesterov, Albina Luchaninova, Jaco Le Roux (South Africa), Andrey UA3USQ, Romunas Majauskas, Nikolay aka 'KOKA'	R03.01.00, D03.02.01
CM-340	Belu Daniel (Romania)	R04.00, R05.04
GM-340	the author, MALE aka Dmitry, Andrey Kolennikov, Andrey UA3USQ, Yuri RA9SVD, Belu Daniel (Romania), Romunas Majauskas	R03.01.00, D03.02.01
GM-350	Sergey RU3VV, Yevgueny RA9MHL, Gorodnov, the author, Valery UA6LPG, Sergey UA0CIC, MALE aka Dmitry, Alexey Gordeyko, Alexander Nesterov, Nikolay UT5VF, Yuri RA9SVD, Belu Daniel (Romania)	R03.00.08, R03.01.06, R03.01.09
CM-360	Belu Daniel (Romania)	R04.00, R05.04
GM-360	Valery UA6LPG, Vladimir Vashchenko, Oleg Tchugunov	R03.01.02
GM-950	Belu Daniel (Romania)	R02.00.00
LTS 2000	Alexander 'Gulliver'	R02.00.10
MAXTRAC	Alexander 'Gulliver', Belu Daniel (Romania)	R07.02.00A
MAXTRUNK (trunked MAXTRAC)	Belu Daniel (Romania)	MaxTrac Trunked Mobile R05.02.00
VOLNA		

Volna-101	Valery UA6LPG (equivalent to MOTOROLA GM-160, *MOTOROLA mobile* connector)	MOTOROLA R06.05.03
Volna-201	Andrey Kolennikov, Valery UA6LPG (equivalent to MOTOROLA GM-360, *MOTOROLA mobile* connector)	MOTOROLA R03.01.00
Volna-302	Andrey Kolennikov (equivalent to MOTOROLA CP-180, *MOTOROLA P040, P080, CP series* connector)	MOTOROLA R05.01
ALTAVIA		
Altavia 301M	Alexander UA4LOR	ALTAVIA v2.01
GRANIT		
Granit-202	Valery UA6LPG	radios with serial numbers below 1200: P_R23M-014; above 1200: P_R23M2
ICOM		
IC-F3	Valery UA6LPG, Alexander Kiselyov, Igor Marzaganov, Alexander UA4LOR, Alexey RA1TEZ, Alexander Nesterov, Nikolay aka 'KOKA'	CSF3
IC-F3GS	Igor RA0FMF, Valery UA6LPG, Igor Marzaganov, Ivan UX7MX	CSF3G
IC-F4	Alexander UA4LOR, Valery UA6LPG, Alexander Nesterov, Igor UU8JA	CSF3
IC-F4GS	MALE aka Dmitry, Alexander Nesterov	CSF3G
IC-F4GT	MALE aka Dmitry, Sergey Bunin	CSF3G
IC-F10	Pavel UA1ZCC	CSF10
IC-R10 scanner	Alexander Nesterov	CSR10
IC-F11	Valery UA6LPG, MALE aka Dmitry, Andrey Kolennikov, Ivan UX7MX, Nikolay aka 'KOKA'	CSF11
IC-F14	MALE aka Dmitry, Nikolay aka 'KOKA'	CSF14
IC-F16	MALE aka Dmitry	CSF14
IC-F21	Pavel RA0SJB, MALE aka Dmitry, Alexander Nesterov, Igor UU8JA	CSF11
IC-F26	Pavel RA0SJB, MALE aka Dmitry	CSF14
IC-F30LT	MALE aka Dmitry	EX-1489
IC-W31N	Andrey UA3USQ	IC-W32 software
IC-F40LT	MALE aka Dmitry	EX-1489
IC-F41GT	Vladislav Bashaev	CSF40G
IC-F1010	MALE aka Dmitry	EX-1764
IC-F1020	MALE aka Dmitry	EX-1764
IC-F110	MALE aka Dmitry, Alexander Nesterov, Vladimir Vashchenko	CSF100

IC-F110S	Vladimir Vashchenko, Alexander Nesterov, Dmitry Kosolap, Nikolay UT5VF	CSF100S
IC-F111	Alexander UA4LOR, ALEKSEY30, MALE aka Dmitry, Andrey Kolennikov, Alexander Nesterov	CSF100
IC-F111S	Sergey RX6LRE, ALEKSEY30, Alexander Nesterov	CSF100S
IC-F2010	Sergey Bunin	EX1764
IC-F210	Pavel RA0SJB, MALE aka Dmitry, Alexander Nesterov	CSF100 ver.1.5
IC-F211	the author, MALE aka Dmitry, Alexander Nesterov, Sergey Bunin	CSF100
IC-F211S	the author, Alexander Nesterov	CSF100S
IC-F310	MALE aka Dmitry, Belu Daniel (Romania)	CSF300
IC-F310S	MALE aka Dmitry, Belu Daniel (Romania)	CSF300S
IC-F320	MALE aka Dmitry, Alexander Nesterov	CSF300
IC-F320S	Valery 4Z5PT, Alexander 'Gulliver', Veniamin Dolgikh, Sergey RX6LRE, Alexey RA1TEZ, MALE aka Dmitry, Nikolay aka 'KOKA'	CSF300S
IC-F410	the author, RV4HV	CSF300
IC-F410S	Alexander Nesterov	CSF300S
IC-F420	Alexander Nesterov	CSF300
IC-F420S	Sergey Bunin	CSF300S
IC-F621	the author (*IC-F110/111/210/211* connector)	CSF500
IC-M710	Igor RA0FMF	Ex1726
IC-FR3000	ALEKSEY30	CSFR3000
ALINCO		
DR-B1	Alexander Nesterov, Belu Daniel (Romania)	DRB1
DR-135	Sergey UA9UDQ, Dmitry UA2FBB, Yuri RA9SVD, Belu Daniel (Romania), Vladimir Vashchenko, Valery UA6LPG	DR135
DR-140	Sergey UA9UDQ, Albina Luchaninova	DR140
DJ-191	Alexander 'Gulliver', Igor RA0FMF, Nikolay Strokinov, Alexander Nesterov, Igor UR5YEI, Albina Luchaninova, Igor UU8JA, Denis Alafinov, Nikolay aka 'KOKA'	DJ191

DJ-195	Sergey UA9UDQ, Pound, Igor RA0FMF, Alexander Nesterov, Yuri RA9SVD, Vladimir Fyodorov, Nikolay aka 'KOKA'	DJ195
DR-235	Vladimir Vashchenko	DR135
DR-435	Vladimir Vashchenko	DR135
DJ-491	Alexander Nesterov, Igor UU8JA, Denis Alafinov	DJ191
TAIT		
T2010	Alexander Nesterov	T2000 Conventional Programming Application
MAXON		
SL500	Alexander Nesterov	SL500
STANDARD		
GX-2000U	Alexander UA9CEE	PPS2000
DRAGON		
SY-5430 (3 ch. programmable)	Yuri US5IVZ	SYTCOM 38
FAKE RADIOS		
Pseudo-KENWOOD TK-2170	MALE aka Dmitry	KPG-101D
Pseudo-KENWOOD TK-3207	Denis Alafinov, Alexander Nesterov, Nikolay aka 'KOKA' (detected as KENWOOD TK-3107)	KPG-55D
Pseudo-MOTOROLA T5930	Alexander Nesterov (detected as KENWOOD TK-3107 !)	KPG-55D
CI-V interface		
OPTOELECTRONICS DC440 decoder	the author (YAESU / VERTEX 3-contact connector)	author's
SIEMENS cellular phones		
A35	the author (firmware programming)	Freia, etc.
C35i	the author (AT-commands, firmware programming)	Hyper Terminal, c3i_xxxx, ...
S35	the author (firmware programming, AT-commands), Andrey Kolennikov (firmware programming, unlocking, customizing)	Hyper Terminal, Winswup32, ZeeSiemensG3, S35C35M35 Explorer
ME45	the author (AT-commands), Yevgueny RA9MHL (firmware programming)	Hyper Terminal, Freia...
S45	the author (AT-commands)	Hyper Terminal
SL45i	the author (AT-commands)	Hyper Terminal
C60	Sergey UA0CIC (AT-commands)	Hyper Terminal

The correctly assembled programming cable needs no adjustment. But... Let's see the troubleshooting technique if **the cable does not work.**.

1. Check the assembly carefully. Check the component correspondence with the schematic diagram. Here are *the most common errors* in the programming cable assembly.

- Sometimes the VT2 PNP transistor is replaced with an NPN transistor. Obviously it will not work.
- Some people try to use any awailable transistors instead of denoted. In this case the work is not guaranteed.
- Sometimes the prescribed voltage regulator is replaced with 78L05, even with 7805. In this case the cable can not be powered from the port reliably. Those regulator ICs should be used with the external power supply only with the appropriate C4 capacitance.
- Some people try to use different resistor values. They think it will do. No, it will not.
- VD1, VD2, VD5, VD6, VD8 diodes should be low power fast silicon ones. Power rectifier diodes and germanium diodes will not work.
- Some guys think the more is the C4 capacitance the better. That is wrong. If the LP2950 is used C4 should be 1.0... 4.7 uF.

2. Make sure no wires are broken and all contacts are reliable, especially in connection to the radio. Broken wires are the frequent reason of malfunction. *Please note !* Connection to the radio must be reliable. Round stereo jacks must be plugged in firmly until stop. Their flanges may be ground off if needed. RJ-11 and RJ-45 connectors get oxidized easily. Socket contacts may be cleaned with an erasor scrap. Jack contacts may be cleaned with a thick needle.

3. Make sure the regulator output voltage is 5V +/- .1V. The wrong voltage may occur due to assembling defects or bad serial port extension pieces. Please note: the serial port may power up the circuit only while accessing the radio. Some software (especially made by Motorola) gives no power from the port, so external power is needed.

4. Make sure the software and operational system are correct. The most common mistake is running DOS programs under Windows. Port accessing technique under Windows is different, DOS programs access ports incorrectly. Use MS DOS or Windows'98 in DOS mode for such programs.

5. Make sure the radio is powered correctly, is turned on and functions properly. Uncareful trunking board removing or burning radio inner circuts with the bad programming cable makes the radio unprogrammable. The battery of a portable radio must be charged completely. A mobile radio must be powered with an appropriate power supply.

6. Consider the specific features of the radio being programmed. Most radios are put in programming (cloning) mode automatically. Some radios are put in programming (cloning) mode manually by pressing a specific set of buttons while turning on. Some radios need pressing specified buttons to start data upload or download. Some radios may be **locked to prevent reading or writing data** Refer to radio manuals or search the web for information.

The author especially appreciates the participance of Sergey UA9UDQ, Yevgueny RA9MHL, Valery UA6LPG, Alexander 'Gulliver', Vladimir Vashchenko, Sergey Bunin, Pavel RA0SJB, MALE aka Dmitry, Alexander Nesterov, Nikolay aka 'KOKA', Belu Daniel in verifying the schematics and testing lots of radios. Special thanks to Valery UA6LPG for the updated PCB design. Special thanks to Gyula HA7JCA for the programming cable description in Hungarian.

The more detailed cable description is published at **this site** and **here**.

PLEASE NOTE ! *The author **does not** collect and **does not** distribute radio programming or service software. Please **do not** ask the author for the software ! Visit www.cqham.ru/sch_eng.html.*

Yevgueny Andropov,
E-mail address is on the diagram or kominform@rosnet.ru

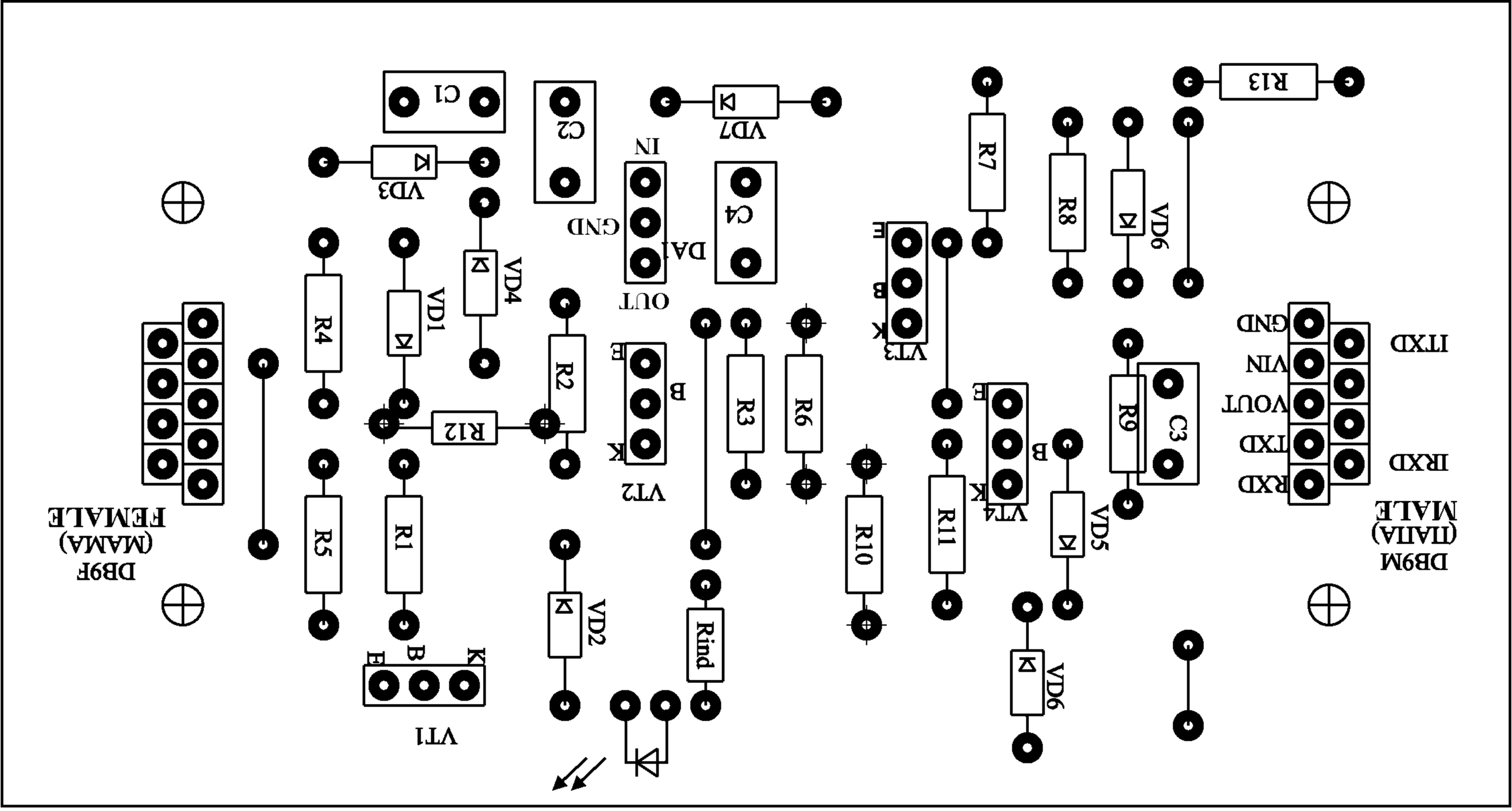
DB9F
(МАМА)
FEMALE
DB9M
(ПАПА)
MALE
ITXD
IRXD
GND
VIN
VOUT
TXD
RXD
R13
R7
R8
VD6
R9
C3
VT3
VT4
R11
R10
VD5
VD6
R4
R5
R1
R12
R2
VD1
VD4
VD3
C1
C2
VD7
IN
GND
OUT
DA1
C4
VT2
R3
R6
VD2
Rind
VT1
E
B
K

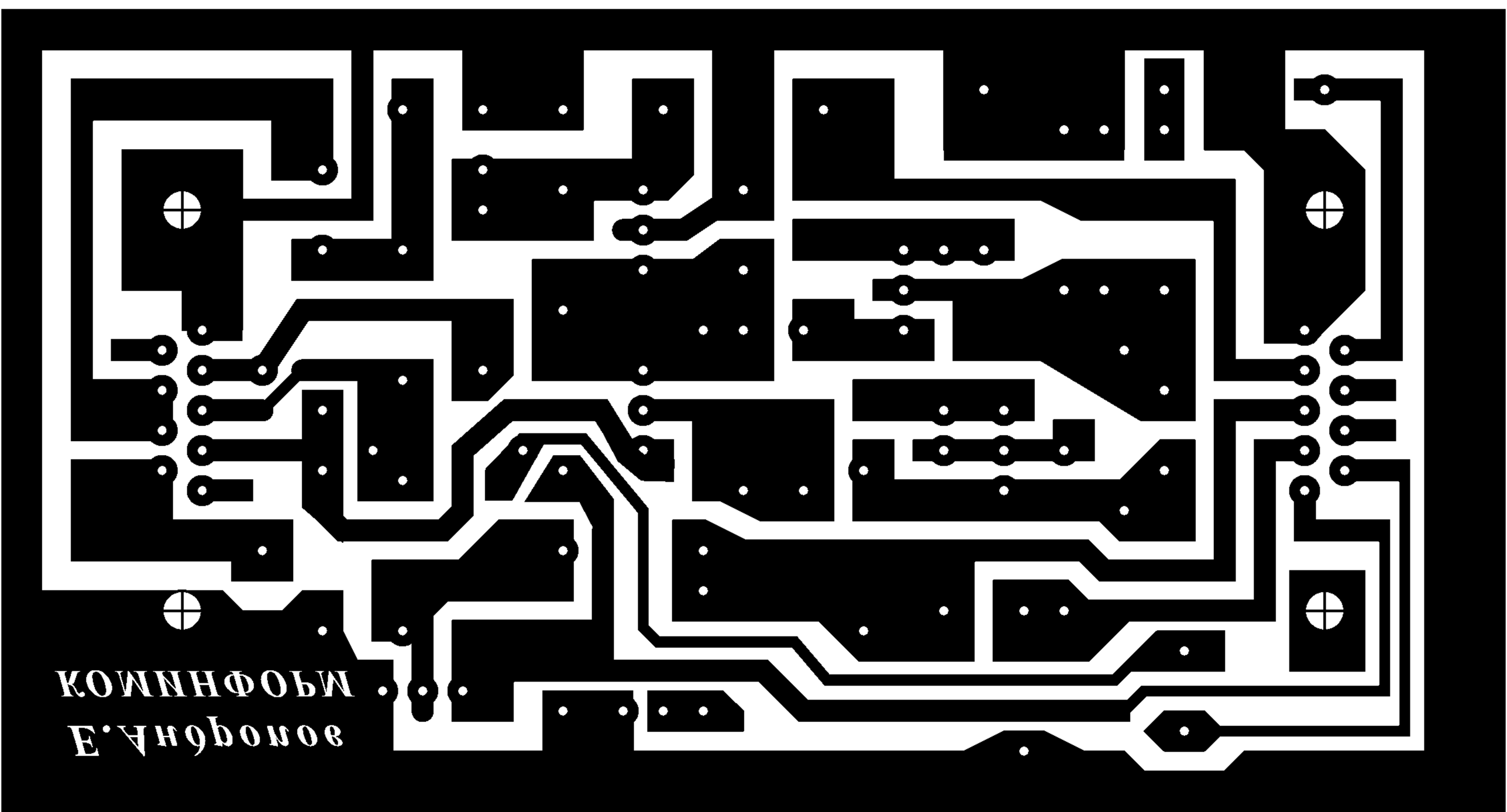
КОМПОФОН
Е.Андронов